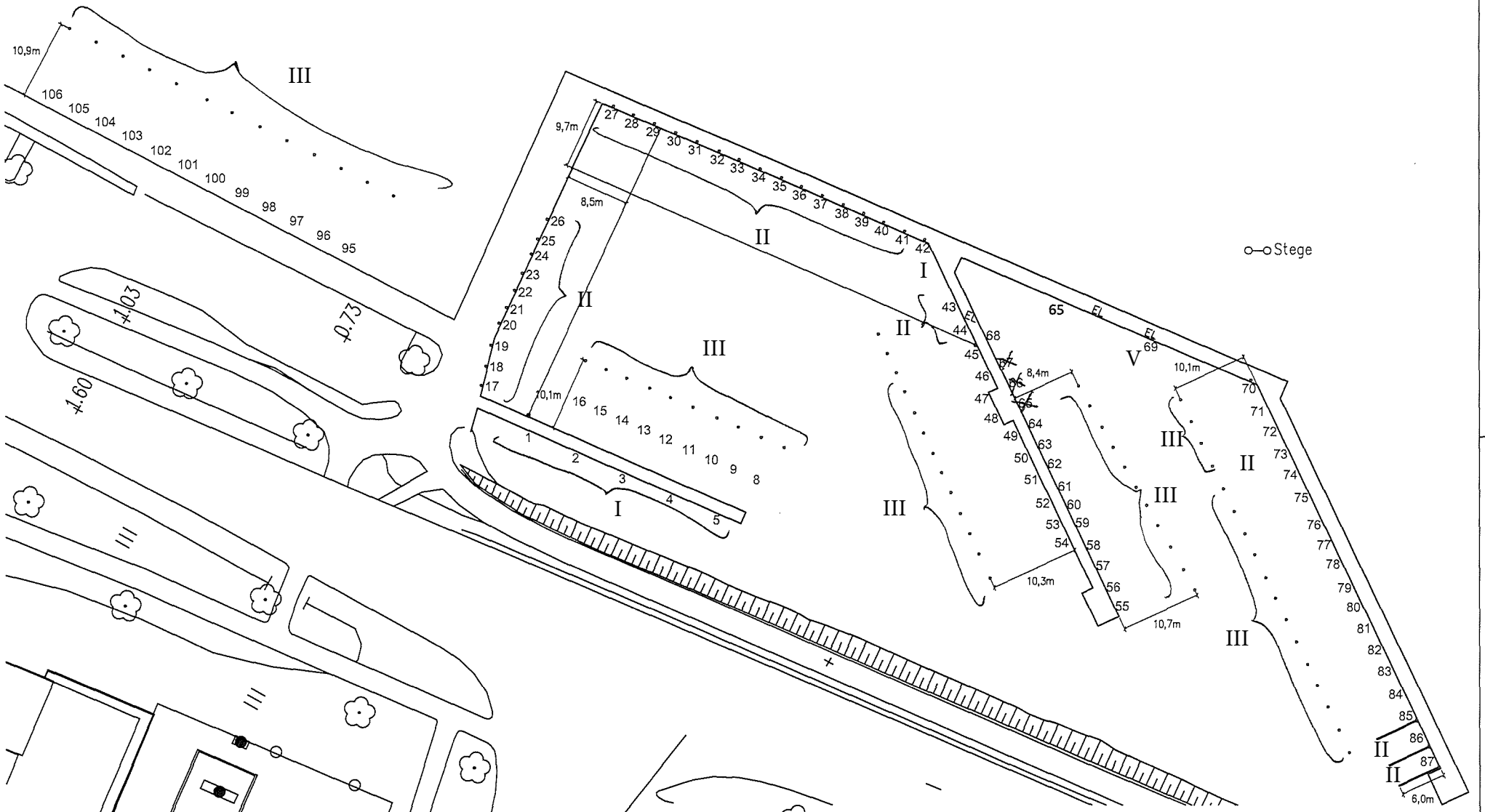

REVIDERAD 10.05.2024/TL

Copyright of ASCE Ab Ltd., whose property this document remains. No part thereof may be disclosed, copied, duplicated or in any other way made use of except with the approval of ASCE Ab Ltd.

Designed by	Checked by	Date	Projekt nr.	Projekt name
VD		28.9.2004	04.091–5	Småbåtshamnar

ASCE Ab Ltd
Norra Esplanadgatan 4B
AX-22100 MARIEHAMN
Tel:+358-(0)18-19966 Fax:+358-(0)18-17696
E-mail: asce@aland.net

Fahlers

Scale 1:500

04.091–5

Edition Sheet C 1/1